EXPLODED VIEW

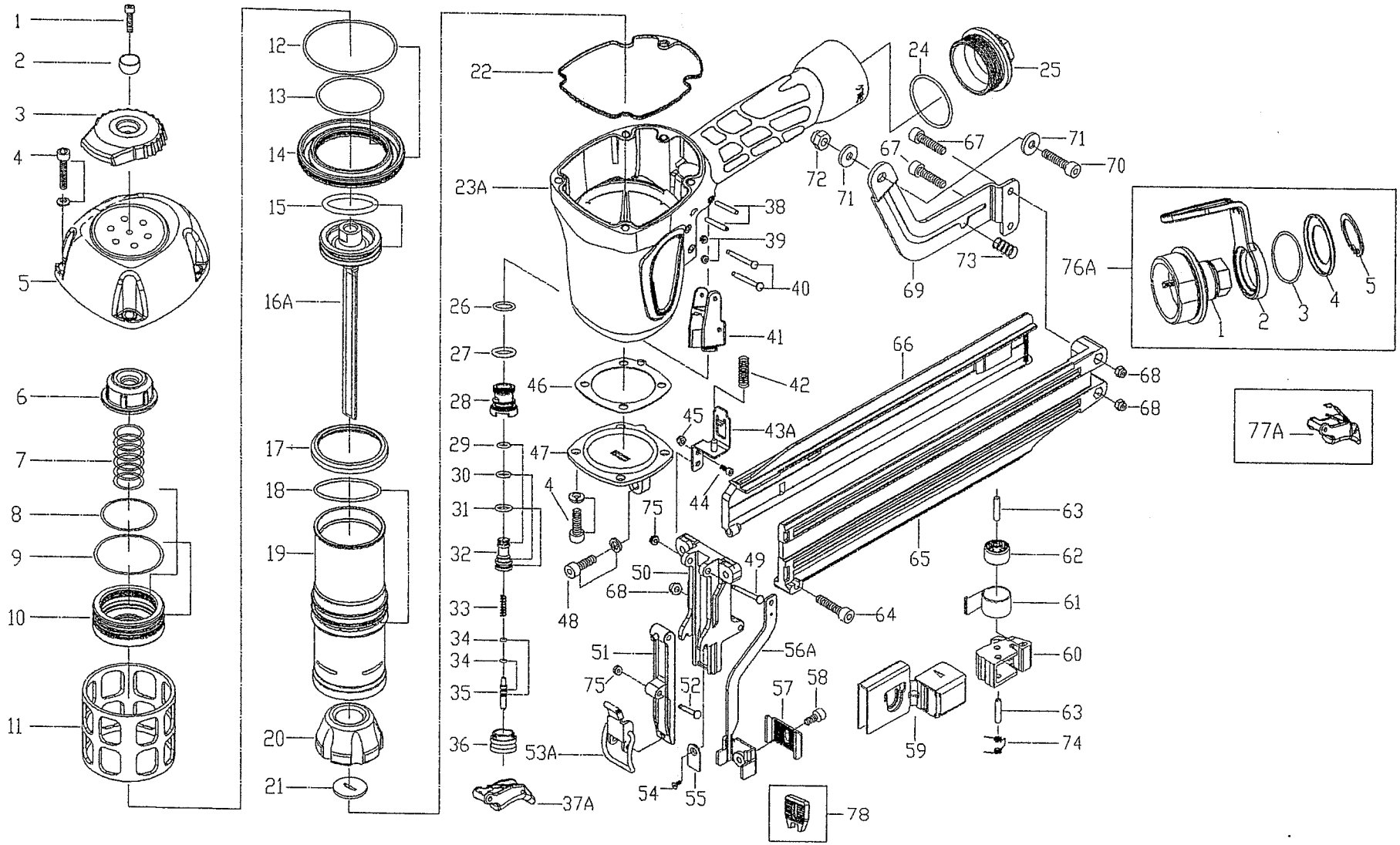

Parts List

Item No.	Part No.	Description	Q'ty
1	32206140766	Hex.Soc.Hd.Bolt	1
2	20790000001	Deflector Bushing	1
3	20790010115	Deflector	1
4	30106250866	Hex.Soc.Hd.Bolt	8
5	207900202XX	Cap	1
6	20750140217	Piston Stopper	1
7	20970160100	Spring	1
8	30700110000	O-Ring	1
9	30700111000	O-Ring	1
10	20750150000	Piston Head Valve	1
11	20790180116	Cylinder Hold Down	1
12	30700112000	O-Ring	1
13	30700113000	O-Ring	1
14	20750370000	Cylinder Spacer	1
15	30700121000	O-Ring	1
16A	20790461101	Driver Assembly	1set
17	20750250117	Cylinder Seal	1
18	30700075000	O-Ring	1
19	20790350000	Cylinder	1
20	20750470115	Bumper	1
21	20790480001	Driver Guide	1
22	20750130015	Cap Gasket	1
23A	207506024XX	Body Assembly	1set
24	30700185000	O-Ring	1
25	207707X02XX	End Cap	1
26	30700079000	O-Ring	1
27	30700081000	O-Ring	1
28	20750900074	Valve	1
29	30700002000	O-Ring	1
30	30700024000	O-Ring	1
31	30700071000	O-Ring	1
32	20750910074	Valve Plunger	1
33	20770960001	Spring	1
34	30700080000	O-Ring	2
35	20770920000	Plunger	1
36	20770930016	Plunger Cap	1
37A	20750952215	Trigger Assembly-Bump	1set
38	30803240001	Spring Pin	2
39	30700078000	Grommet	2
40	20770890001	Trigger Pin	2
41	22222840215	Contact Trip Guide	1
42	20791490001	Safety Spring	1
43A	20791482001	Upper Safety Lever Assy	1set
44	30104100166	Hex.Soc.Hd.Bolt	1
45	30604070001	Locknut	1

Item No.	Part No.	Description	Q'ty
46	20011070000	Gasket	1
47	20111080166	Bottom	1
48	30106200866	Hex.Soc.Hd.Bolt	2
49	20793680001	Latch Door Pin	1
50	20791350166	Nose	1
51	20791340066	Door	1
52	20971170001	Roll Pin	1
53A	20791362201	Latch Door Assimbly	1set
54	30503060166	Hex.Soc.Hd.Bolt	1
55	20791440100	Steel	1
56A	20791511001	Lower Safety Lever Assy.	1set
57	20791520001	Safety Cover	1
58	30105080266	Hex.Soc.Hd.Bolt	1
59	20792130001	Pusher	1
60	20792360115	Latch	1
61	20792090100	Spiral Spring	1
62	20792110016	Roller	1
63	32104198012	Roller Pin	2
64	30105300866	Hex.Soc.Hd.Bolt	1
65	20792050215	Magazine	1
66	20792180215	Magazine Cap	1
67	30105180166	Hex.Soc.Hd.Bolt	2
68	30605080001	Locknut	3
69	20792170001	Bracket	1
70	30106220166	Hex.Soc.Hd.Bolt	1
71	30900002001	Flat Washer	2
72	30606100001	Locknut	1
73	20792620001	Spring	1
74	20792290001	Spring	1
75	30700157000	O-Ring	1

Optional Parts			
76A	20970832115	Belt Hook Assembly	1set
76A-1	209707X00XX	End Cap	1
76A-2	20970830115	Belt Hook	1
76A-3	30700188000	O-Ring	1
76A-4	20970840001	Cover Belt Hook	1
76A-5	33425000001	C-Ring	1
77A	20770952359	Trigger Assembly-SEQ.	1set
78	20792900066	Safety Adaptor	1

SF16851H2#40791100100
7/13/2012